Assembly Instructions / Navodila za montažo / Montageanleitungen

GOLDIE

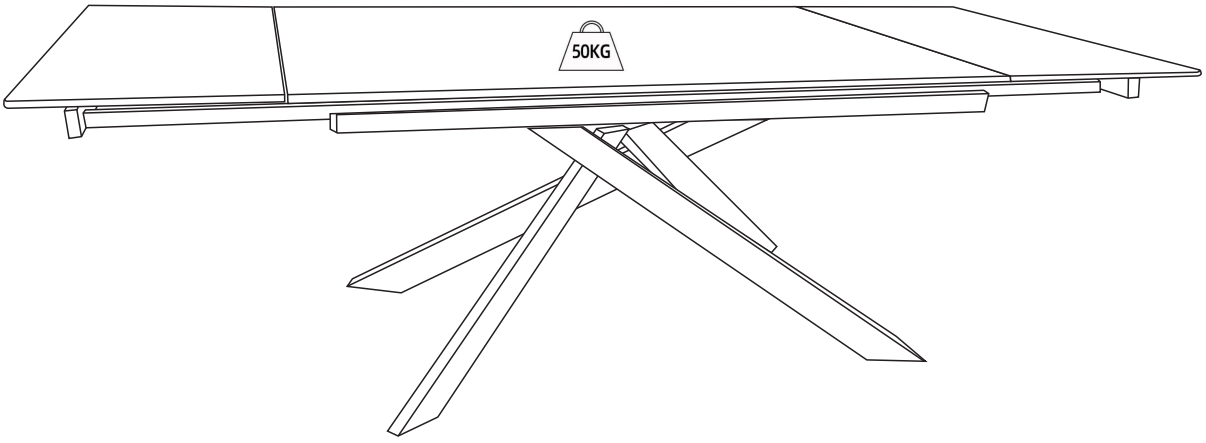

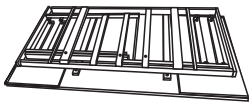 ①x1	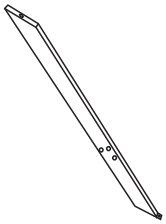 ②x2	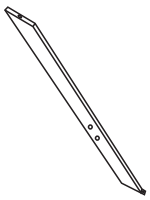 ③x2	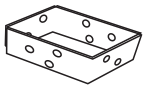 ④x1	

A X14	B X14	C X1			

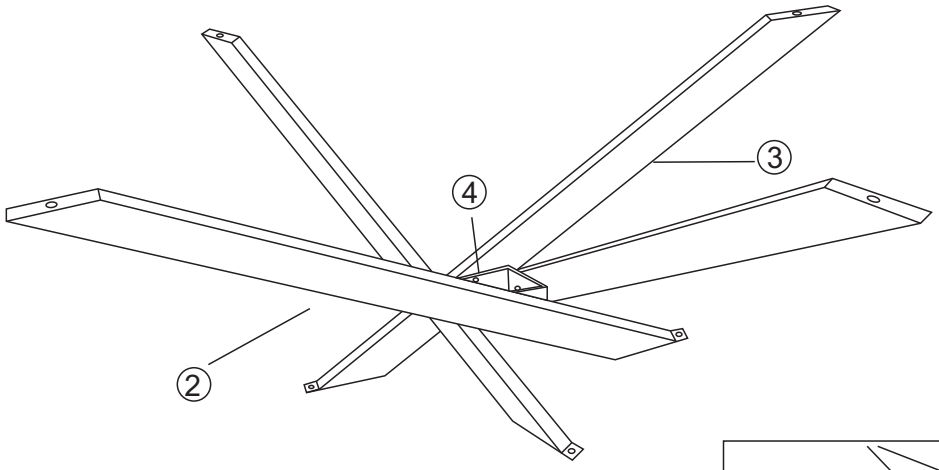
4
3
2

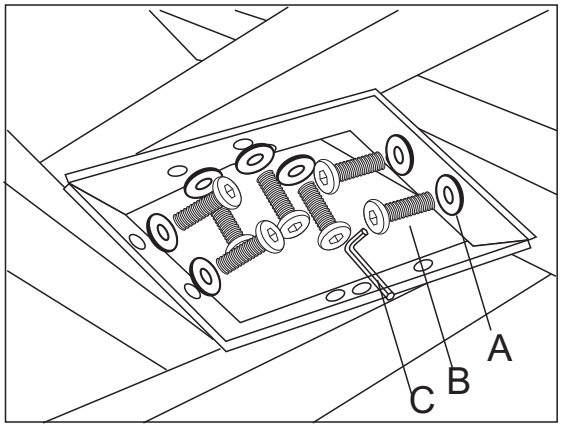
A
B
C

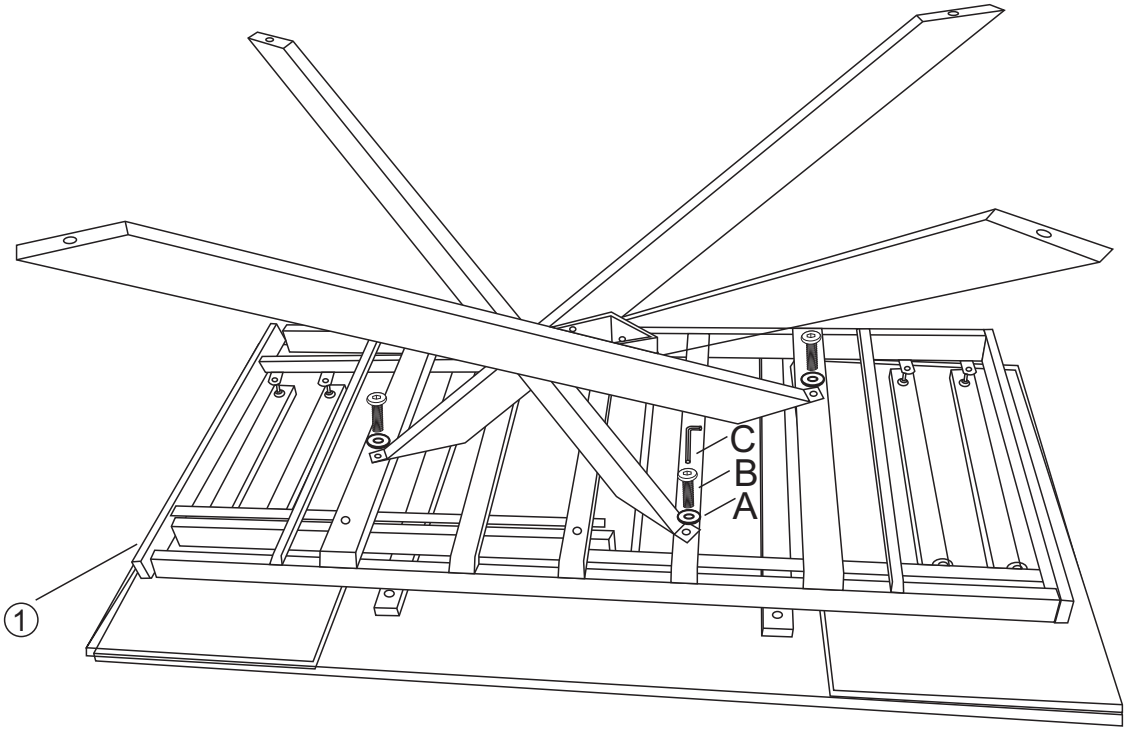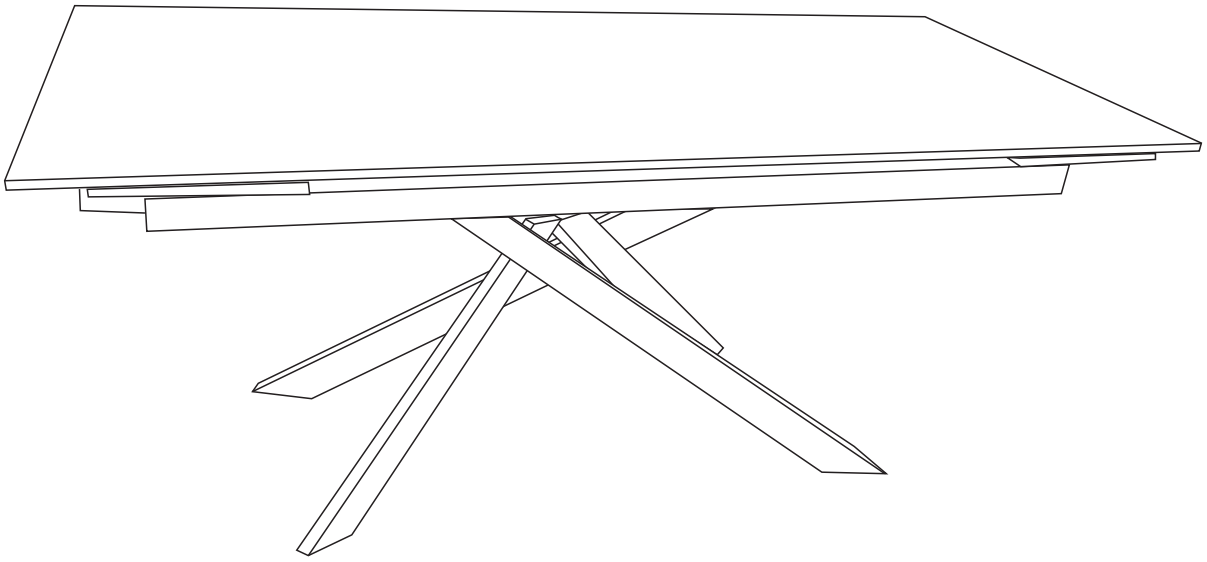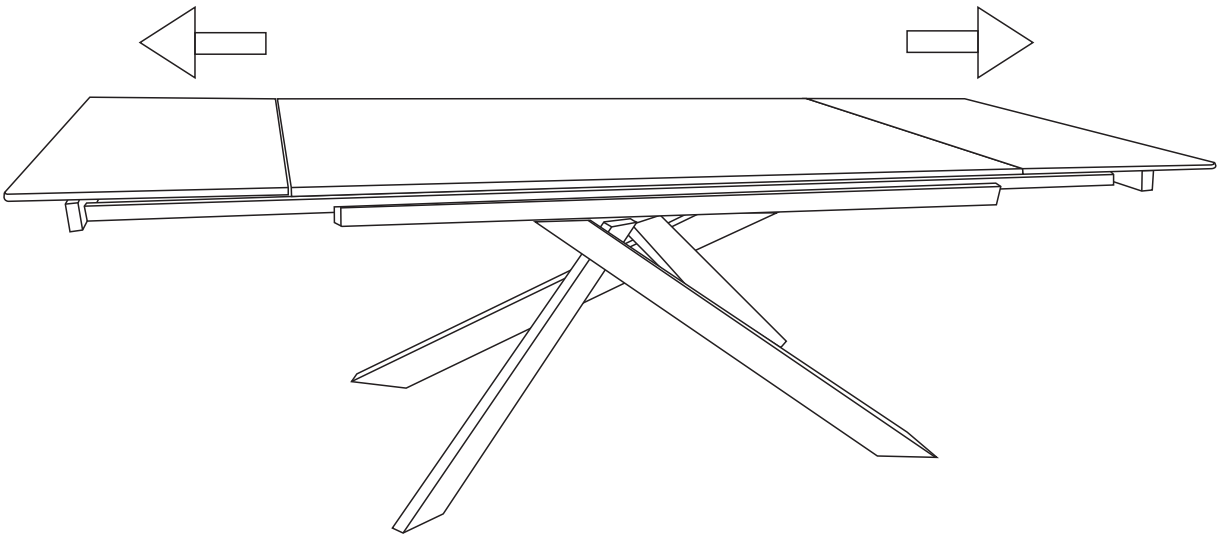
C
B
A
1